Reprinted from

THEORETICAL AND APPLIED MECHANICS

Volume 40

Proceedings of the 40th Japan National Congress for Applied Mechanics, 1990

Edited by Japan National Committee for Theoretical and Applied Mechanics, Science Council of Japan

UNIVERSITY OF TOKYO PRESS, 1991

Nonlinear Analysis of Self-Excited Oscillation of a Closed-Engine-Governor Loop

Yoshihiko KAWAZOE

Department of Mechanical Engineering, Saitama Institute of Technology, Okabe, Saitama

Most past research work on the self-excited oscillation called low-speed hunting of a closed-engine-governor loop has been devoted to distinguishing the divergence of a small disturbance at a given equilibrium state, resulting in a hunting estimation different from that of the actual system. In addition, it is impossible to predict whether the limit cycle will occur or not. In order to explain the mechanism of limit cycle evolution, the previous work derived a single-degree-of-freedom differential equation, which applies simple physical reasoning to the the mechanism of nonlinear negative damping force and limit cycle evolution. The present work provides a final amplitude of limit cycle to which the motion will build from an energy consideration on the basis of the approximate nonlinear self-excited oscillation system. Further, it gives a much closer amplitude to the actual one by employing a more accurate approximation of the nonlinear engine torque characteristics.

Nomenclature

A_d =effective diaphragm area.[12]
C_e =equivalent viscous damping coefficient of the governing system.[12]
I_e =moment of inertia of the crankshaft system.[13]
J_e $=2\pi I_e$
k =spring stiffness of the fuel control rack.
m_e =equivalent mass of moving parts of the governing system.[12]
N_e, n =engine speed and its deviation from the equilibrium.
P =governing pressure.
t =time.
T_e =accelerating torque.
T_P =time constant of the first order of the speed-sensitive part, i.e.,the governing pressure for the pneumatic governor.
X =fuel control rack displacement.
$_o$ =equilibrium state.

I. INTRODUCTION

The engine torque increases with an increasing engine speed except in high speed running, because a fuel injection pump with its fuel control rack locked delivers an increased quantity of fuel in each injection with an increased engine speed, so that the equilibrium of the idling speed is statically unstable. To get rid of this, a governor is additionally provided. However, in a governed diesel engine, the idling speed cannot remain constant and is followed by a low frequency noise of its own[1-10]. This fluctuation of engine speed is called low-speed hunting(Fig.1).

This phenomenon is a problem of control of a closed loop composed of the engine crankshaft system, governor, fuel injection pump, and combustion torque as shown in Fig.2, and is known to be a self-excited oscillation.[9,11-16] Nevertheless, most of the past research work on engine speed hunting has been devoted to discriminating the divergence of a small disturbance given at an equilibrium state, resulting in a hunting estimation different from that of the actual system. The fluctuation becomes larger and hunting region extends to the higher speed range with decreasing engine size and increasing engine performance at full load, so that the amplitude of limit cycle is of great importance, not only from the view point of nonlinear oscillation but also from that of design of governing system.

Computer simulation yields a transient process during which a small oscillation develops into a sustained oscillation with a large amplitude.[13,15] However, it was left unsolved to explain analytically the mechanism of limit cycle evolution. For a better understanding of the phenomina, it is desirable to obtain the amplitude and frequency of the limit cycle analytically.

The previous work derived a single-degree-of-freedom differential equation noting the phenomenon of very slow frequency, which applies simple physical reasoning to the mechanism of nonlinear negative damping force which causes an instability and limit cycle evolution, resulting from a concept of the nonlinear dynamic feedback-torque gain composing a static feedback-torque gain and a virtual time constant depending on the phase relations between the feedback-torque and the engine speed.

The present work provides a final amplitude of limit cycle to which the motion will build up from a energy consideration on the basis of the approximate nonlinear self-excited oscillation system. It also gives analytically a closer amplitude to that of the actual governing system by employing higher polynomial approximation of

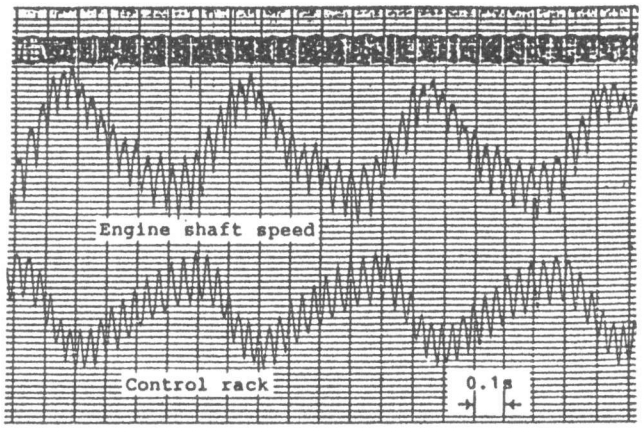

Fig.1. Example of recorded hunting behavior of a four-cylinder four-stroke engine of the swirl-chamber type with a Bosh-type individual fuel injection pump (800 rpm).

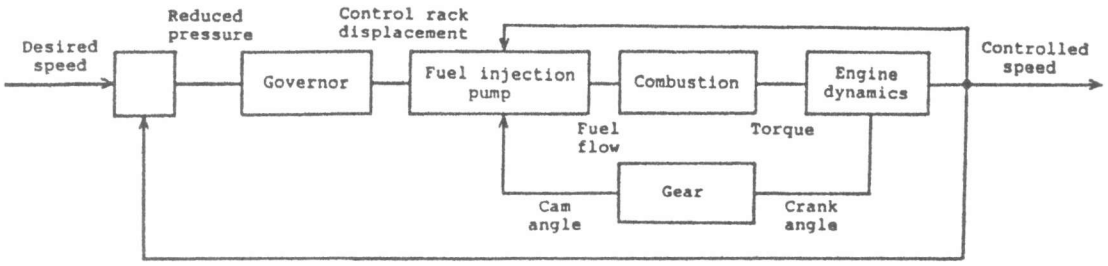

Fig.2. Block diagram of a closed-engine-governor loop.

nonlinear engine torque characteristics.

II. STEADY STATE AMPLITUDE OF LIMIT CYCLE

2.1 An Approximate Nonlinear Differential Equation of a Single-Degree-Of-Freedom System[18,19]

A differential equation of an approximated single-degree-of-freedom system of a closed engine-governor loop is given by Eq.(1) with respect to the engine speed deviation from the equilibrium state on the basis of the following characteristics.[9,11-16] (1)The self-excited state of the closed-engine-governor loop is a slow frequency oscillation below 2 or 3 Hz. (2) The observed engine speed fluctuation with a large amplitude is nearly harmonic, which means that the negative damping force is small in comparison to the elastic and inertia forces of the motion. (3) The frequency of a dynamically unstable oscillation of a linearlized differential equation of a closed loop agrees well with that of the observed steady state self-excited oscillation. (4) The quartic characteristic equation of the closed loop has two real roots and a pair of conjugate complex roots. These two real roots have large negative values; accordingly stability for small oscillations depends on the representative complex characteristic root. (5) The frequencies are almost the same over the engine speed range where the self-excited oscillation occurs.

$$M_T \frac{d^2n}{dt^2} + C_T \frac{dn}{dt} + K_T n = 0 \tag{1}$$

where

$$M_T = J_e \tag{2}$$

$$C_T = \frac{(J_e - G_{Ts}T_F)}{(T_P + C_e/K)} \tag{3}$$

$$K_T = \frac{G_{TSo}}{(T_p + C_e/k)} \tag{4}$$

$$G_{TS} = [\ -A_d(\frac{\partial P}{\partial N_e})_o(\frac{\partial T_e}{\partial X})/k] \tag{5}$$

$$G_{TSo} = [\ -A_d(\frac{\partial P}{\partial N_e})_o(\frac{\partial T_e}{\partial X})_o/k] \tag{6}$$

$$T_F = \frac{(T_P C_e + m_e)}{(T_P k + C_e)} \tag{7}$$

The three terms in Eq.(1) are the equivalent inertia force, the equivalent damping force, and the equivalent spring force of the closed loop. The torque gain G_{TS} is the rate of static feedback-torque for the engine speed increase, while T_F is half the virtual time constant of the first order with respect to the feedback-torque caused by an engine speed increase. If the equivalent damping coefficient C_T is negative, the amplitude will begin to build up; how far this building up will develop depends on the nature of the nonlinearity. The energy is put into the system during each cycle when the dynamic feedback-torque $G_{TS}T_F(dn/dt)$ is larger

than the inertia torque $J_e dn/dt$. This causes a dynamic instability. The energy comes from the steady torque of an engine.

The slope of the torque $\partial T_e/\partial X$ with respect to the fuel control rack displacement X exhibits a nonlinear characteristic in reality. The nonliniality is particularly strong in the regions where the fuel rack displacement or the fuel delivery is small, showing a very small slope of the shaft torque.

2.2 Approximation of torque characteristics with cubic equation

The simplest possible mathematical expression for the nonlinearity of the slope of the torque can be written as

$$\left(\frac{\partial T_e}{\partial X}\right) = a + bX + cX^2 \tag{8}$$

where the constants a, b, c are determined so as to satisfy a large number of experimental data using the least square method. Thus, the differential equation of an approximated single-degree-of-freedom system Eq.(1) with this type of nonlinear damping is

$$M_T \frac{d^2n}{dt^2} - \left(C_1 - C_2\left[n + \left(\frac{B}{2C}\right)\right]^2 \right)\frac{dn}{dt} + K_T\, n = 0 \tag{9}$$

where

$$C_1 = \frac{-\left[J_e + G_x T_F C(B^2/(4C^2) - A/C)\right]}{\left[T_P + C_e/K\right]} \tag{10}$$

$$C_2 = \frac{-G_x T_F C}{(T_P + C_e/K)} \tag{11}$$

$$G_x = -(X - X_o)/n = \left[-A_d\left(\frac{\partial P}{\partial N_e}\right)_o/k\right], \qquad (G_x > 0) \tag{12}$$

$$A = a + bX_o + cX_o \tag{13}$$

$$B = -(b + 2cX_o)G_x \tag{14}$$

$$C = cG_x{}^2 \tag{15}$$

In this approximated system represented by Eq.(9), a component of the higher frequency caused by the suction stroke in the actual system[9,13] is neglected, and the fuel delivery process[13] is assumed to be continuous and depends only on the fuel rack displacement. The Constant A equals to the slope of the torque $(\partial T_e/\partial X)_o$ at the equilibrium displacement X_o. The observed engine speed fluctuation with a large amplitude is nearly harmonic, which means that the negative damping force is small in comparison to the elastic and inertia force of the motion, because with a harmonic motion the large spring and inertia forces are harmonic and only the small damping force causes a deviation from the harmonic motion. Thus we assume harmonic motion

$$n(t) = n_o \sin\Omega t \tag{16}$$

$$\Omega = (K_T/M_T)^{1/2} \tag{17}$$

The final amplitude to which the motion will build up can be found from an energy consideration. For amplitudes smaller than this final one, the damping force $C_T(dn/dt)$ puts energy into the system; while for amplitudes greater than the final one, the damping dissipate energy. At the final amplitude we have for a full cycle:

$$L = \int C_T(dn/dt)dn = 0 \tag{18}$$

or

$$\int\{-C_1 + C_2[n + (B/2C)]^2\}(dn/dt)dn = 0$$

Thus the amplitude of limit cycle n_o is

$$\begin{aligned} n_o &= [4C_1/C_2 - (B/C)^2]^{1/2} \\ &= 2[C_1/C_2 - (B/2C)^2]^{1/2} \end{aligned} \tag{19}$$

Further Eq.(19) can be written as

$$\begin{aligned} n_o &= 2[(J_e/G_XT_F - A)/C]^{1/2} \\ &= 2[(J_e/G_XT_F - (\partial T_e/\partial X)_o)/(cG_x^2)]^{1/2} \end{aligned} \tag{20}$$

2.3 Approximation of torque characteristics with quartic equation

The nonlinearity is particulary strong in the regions where the fuel rack displacement or the fuel delivery is small, showing a very small slope of the shaft torque due to the characteristics inherent in the fuel injection pump itself. Accordingly, the approximation with cubic equation is different from the actual torque characteristics where the rack displacement is quite small. In order to obtain a sufficientry accurate approximation for the actual torque characteristics, we will employ a quartic equation. Then, the mathematical expression for the nonlinearity of the slope of the shaft torque can be written as

$$\left(\frac{\partial T_e}{\partial X}\right) = a + bX + cX^2 + dX^3 \tag{21}$$

where the constants a, b, c, d are determined so as to satisfy a large number of experimental data using the least square method. From Eqs.(3),(5),(12) and Eq.(21), the nonlinear damping coefficient becomes

$$C_T = \frac{[J_e - G_XT_F(A+Bn+Cn^2+Dn^3)]}{(T_P + C_e/K)} \tag{22}$$

The final amplitude to which the motion will build up can be found from an energy consideration Eq.(18) on the assumptions of Eqs.(16),(17),for which the procedure is similar. Thus the amplitude of limit cycle n_o is

$$\begin{aligned} n_o &= 2[(J_e/G_XT_F - A)/C]^{1/2} \\ &= 2[(J_e/G_XT_F - (\partial T_e/\partial X)_o)/((c+3dX_o)G_x^2)]^{1/2} \end{aligned} \tag{23}$$

which is the same form as Eq.(20).

III. APPLICATION TO AN ACTUAL GOVERNING SYSTEM

3.1 Amplitude of Limit Cycle with a Cubic Approximation of Torque Characteristics

Figure 3 shows the shaft torque at 800 rpm of a four-cylinder four-stroke engine of the swirl-chamber type with a total stroke volume amounting to 1986 cm^3 combined

with a Bosh-type individual fuel injection pump having plungers 6.5 mm in diameter, cam lift 8 mm high, where the symbol "•" means the experimental data and the curve is the approximation with a cubic equation obtained using the least square methods, which gives a good approximation except below the rack displacement 2 mm.

Figure 4 is a mathematical expression for a nonlinear damping coefficient C_T as a function of engine speed deviation n with the cubic approximation of the the shaft torque. It is seen that C_T is asymmetric, and is negative for the deviation within ± 20 rpm, accordingly the oscillation builds up around the equilibrium state(n=0). It is also seen that C_T becomes positive for the engine speed deviation over +20 rpm, accordingly the oscillation is damped, but becomes negative for the engine speed below equilibrium speed, accordingly the oscillation is self-excited. Thus, the final amplitude of limit cycle to which the oscillation will build up can be found from an energy consideration.

Figure 5 is the results of the integration of Eq.(1), showing the building up of

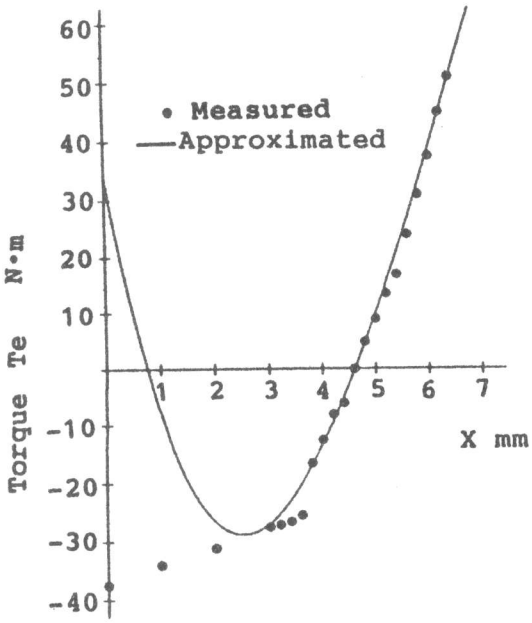

Fig.3. Nonlinear characteristic of brake torque (800 rpm) and approximation with qubic equation.

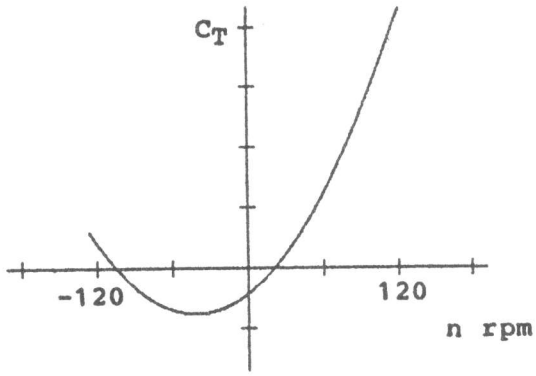

Fig.4. The simplest possible mathematical expression for a nonlinear damping coefficient.

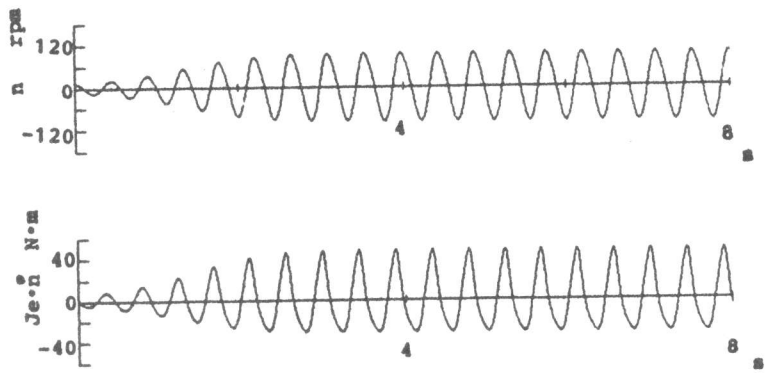

Fig.5. Integration of Eq.(1) in combination with the qubic torque approximation, showing the building up of an oscillation to its final amplitude (800 rpm, n(0)=12 rpm).

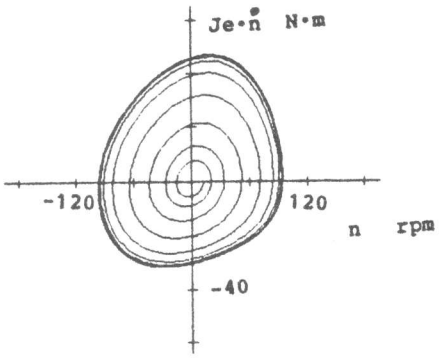

Fig.6. Limit cycle in a phase plane with the qubic torque approximation. (800 rpm, n(0)=12 rpm).

a nonlinear, self-excited oscillation to its final amplitude responding to a small step increment of the engine speed. Figure 6 shows the calculated transient behavior on a phase plane plotting engine speed acceleration versus engine speed, indicating development of a clockwise limit cycle. The trajectories near the limit cycle spiral on to it from its inside and outside.

The amplitude n_o of the limit cycle calculated analytically from Eq.(20)is about 94 rpm, while the result of numerical integration of Eq.(1) being 98 rpm, the experimental results being about 100 ∿ 115 rpm.

3.2 Amplitude of Limit Cycle with a Quartic Approximation of Torque Characteristics

Figure 7 shows the shaft torque at 800 rpm, where the symbol "•" means the experimental data and the curve is the approximation with a quartic equation, which gives a sufficiently close approximation to the actual characteristics. Figure 8 is a mathematical expression with the quartic approximation of the shaft torque for a nonlinear damping coefficient C_T as a function of engine speed deviation n. It is seen that C_T is asymmetric, and is negative for the deviation around the equilibrium state(n=0), accordingly a small oscillation builds up around the equilibrium state(n=0). It is also seen that C_T is negative for the engine speed below equilibrium speed, but becomes positive for the engine speed deviation over +20 rpm, accordingly the oscillation is damped. The final amplitude of limit cycle can be found from an energy consideration. Figure 9 is the results of the integration of Eq.(1) in combination with a quartic torque approximation, showing the building up of an oscillation to its final amplitude responding to a small step increment of the engine speed. Figure 10 shows the calculated transient behavior with a quartic torque approximation on a phase plane plotting engine speed acceleration versus engine speed.

The amplitude n_o of the limit cycle calculated analytically from Eq.(23) is about 110 rpm, while the result of numerical integration of Eq.(1) being 110 rpm, the experimental results being about 100 ∿115 rpm. It is seen that Eq.(23) predicts the amplitude of limit cycle quite well. With the frequency the calculated result is 2.2 Hz in good agreement with the experimental value of about 2.0 Hz.

IV. REMARKS ON THE AMPLITUDE OF LIMIT CYCLE

The amplitude n_o of engine speed fluctuation during the limit cycle is given by Eq.(20) or Eq.(23), from which the effects of parameters of the closed engine-governor loop on the amplitude of limit cycle will be estimated. The amplitude can be decreased by increasing the moment of inertia J_e of crankshaft system, and also by decreasing the delay T_F of virtual time constant of the first order with respect

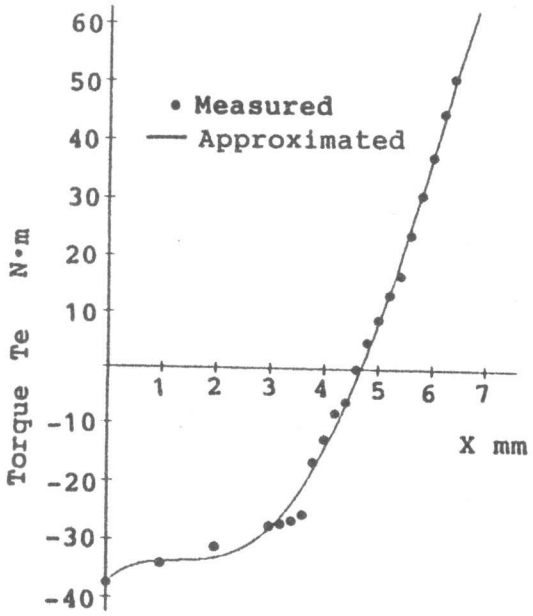

Fig.7. Nonlinear characteristic of brake torque (800 rpm) and approximation with quartic equation.

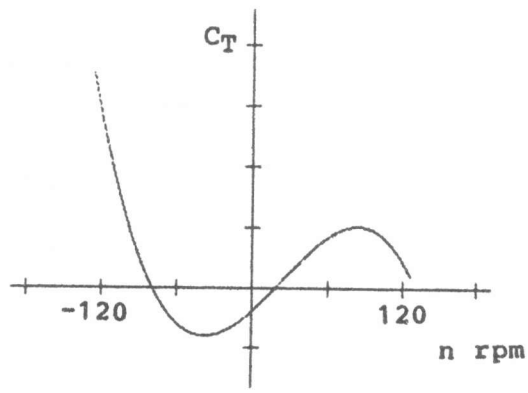

Fig.8. The mathematical expression for a nonlinear damping coefficient in combination with the quartic torque approximation.

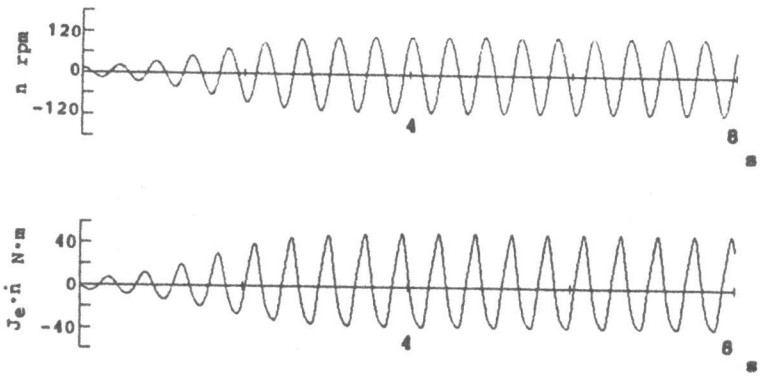

Fig.9. Integration of Eq.(1) in combination with the quartic torque approximation, showing the building up of an oscillation to its final amplitude(800rpm, n(0)=12 rpm).

to the feedback-torque caused by an engine speed increase. The amplitude decreases with decreasing slope $(\partial T_e/\partial X)_o$ of shaft torque at equilibrium point, and also decreasing coefficient C in the mathematical expression for the nonlinear slope of the shaft torque. With the static gain G_x of fuel rack displacement against the engine speed increment, the amplitude of engine speed fluctuation takes a maximum value near the reference value of G_x, and decreases with decreasing the value of G_x, and slightly decreases with increasing the value of G_x than the reference value. The gain G_x of fuel rack decreases, as the gain $(\partial P/\partial N_e)_o$ of the speed-sensitive part and the governing force decrease. Further, it decreases as the restoring spring stiffness of the fuel control rack increases.

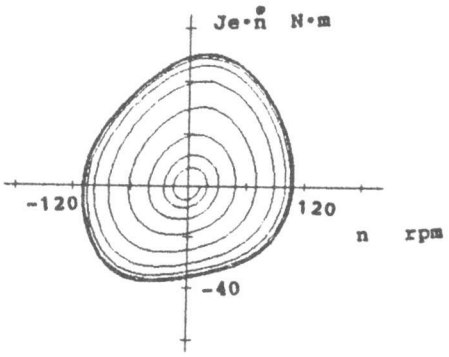

Fig.10. Limit cycle in a phase plane with the quartic torque approximation. (800 rpm, n(0)=12 rpm).

V. CONCLUSIONS

The present work has analytically provided a final amplitude of limit cycle to which the motion wolud build up on the basis of the approximate nonlinear differential equation of a closed-engine-governor loop, which gives a simple physical reasoning to the limit cycle evolution. There is energy input during a cycle when the dynamic feedback-torque is larger than the inertia torque. This increases the amplitude, and the energy put in by the negative damping force is neutralized by the energy dissipated by the positive force at the final amplitude because of the nonlinearity of the steady torque characteristics of an engine.

The analytical solution of limit cycle agrees well with the experiment, when the numerical data of a four-cylinder four-stroke engine of the swirl-chamber type in combination with a Bosh-type individual fuel injection pump are given.

The amplitude n_o of engine speed fluctuation during the limit cycle is provided by a simple formula, from which the effects of parameters of the closed engine-governor loop on the amplitude of limit cycle can be estimated.

Acknowledgments

The author is grateful to Professor Emeritus K.Tsuda of the University of Tokyo for his suggestions and encouragement. Sincere thanks are extended to Professor H.Sakai and Mr.Ohtake of the Faculty of Engineering, University of Tokyo, and Professor A.Sekiguchi of Saitama Institute of Technology for their support in this work and also to Messers T.Okutani and T.Ohba for their help in carrying out the computer calculation when senior students during the 1990 academic year.

REFERENCES

1) Webb,C.R.,The Pneumatic Governor,Auto.Eng.,Vol.47(1957),pp. 146-151.
2) Takahashi,T.,Governing of Internal Combustion Engines(Part1),J.Jpn.Soc.Mech. Engrs.,Vol.62,(1959),pp.565-582 (in Japanese).
3) Takahashi,T.,Governing of Internal Combustion Engines(Part2),J.Jpn.Soc.Mech. Engrs.,Vol.62,(1959),pp.755-768 (in Japanese).
4) Takahashi,T.,as a contributer, Handbook of Internal Combustion Engines,Edited by Hatta,K.and Asanuma,T.(Asakura Publishing,1960),pp.236-245 (in Japanese).
5) Kaneko,Y.,Speed Control Characteristics of the High Speed Diesel Engine, Shin Mitsubishi Juko Giho,5,(1963),pp.247-253 (in Japanese).
6) Fujihira,U.,Stability Problems in the Fuel Injection System for Diesel Engines, Internal Combustion Engine,Vol.4,(1965),pp.23-29 (in Japanese).
7) Ishimaru,T.,Idling Hunting of Diesel Engine Mounted on Road Vehicles, J.Soc.

Auto.Eng.Jpn, Vol.19,(1965),pp.845-850 (in Japanese).
8) Welbourn,D.B., Roberts,D.K., and Fuller,R.A.,Governing of Compression-Ignition Oil Engines, Proc. Inst. Mech.Engng., Vol.173,(1959),pp.575-604.
9) Kawazoe,Y.,Low Speed Hunting of the Pneumatically Governed Compression Ignition Engine (1st Report,Various Experiments for Identifying the Cause),Bulletin of JSME,Vol.28,(1985),pp.2022-2027.
10)Kamata,M.,Ito,S.,Sakai,H.,and Ishii,Y.,Idle Speed Fluctuations of Diesel Engines with Mechanical Governors.,Trans. Soc.Auto.Engrs.Japan,No.32(1986),pp.53-60 (in Japanese).
11)Kawazoe,Y.,Low Speed Hunting of the Pneumatically Governed Compression Ignition Engine(2nd Report,Stability Criticism of the Closed Engine-Governor Loop Based on Measured Frequency Responses of the Two Open Systems Composing the Loop). Bulletin of JSME,Vol.28,(1985),pp.2365-2369.
12)Kawazoe,Y.,Dynamics and Equivalent Damping of the Fuel Control System of the Pneumatically Governed Compression Ignition Engine, Bulletin of JSME,Vol.29, (1986),pp.501-507.
13)Kawazoe,Y.,Low Speed Hunting of the Pneumatically Governed Compression Ignition Engine(3rd Report,Computer Simulation of the Low Speed Hunting),Bulletin of JSME,Vol.29,(1986),pp.2211-2217.
14)Kawazoe,Y.,Low Speed Hunting of the Pneumatically Governed Compression Ignition Engine(4th Report,Effect of Simulated Venturi Diameter on Phase Lag of the Fuel Control Rack Response).,Bulletin of JSME,Vol.29,(1986),pp.1233-1238.
15)Kawazoe,Y., Self-excited oscillation of a closed-engine-governor loop:Equilibrium instability and limit cycle. Theoretical and Applied Mechanics.Vol.37(Univ.Tokyo Press,1988), pp.281-288.
16)Kawazoe,Y.,Low-speed hunting of the pneumatically governed compression ignition engine(Effects of various parameters on the amplitude and frequency of limit cycle).JSME International Journal, Series III,Vol.32(1989),pp.568-574.
17)Kawazoe,Y., Self-excited oscillation of a closed-engine-governor loop(1st report, negative damping force of linearly approximated single-degree-of-freedom system) ,Trans.Jpn.Soc.Mech.Eng.,Vol.56C(1990),pp.23-28(in Japanese).
18)Kawazoe,Y.,Self-excited oscillation of a closed-engine-governor loop(2nd report, Non-linear damping force and limit cycle evolution of an approximated single-degree-of-freedom system),Trans.Jpn.Soc.Mech.Eng.,Vol.56C(1990),pp.2867-2873(in Japanese).
19)Kawazoe,Y., Nonlinear,Self-excited oscillation of a closed-engine-governor loop: The mechanism of nonlinear damping force and limit cycle evolution. Theoretical and Applied Mechanics.Vol.39(Univ. Tokyo Press, 1990), pp.219-226.